SECTION A-A

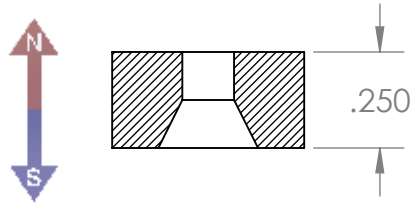

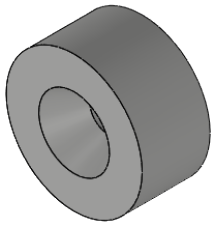

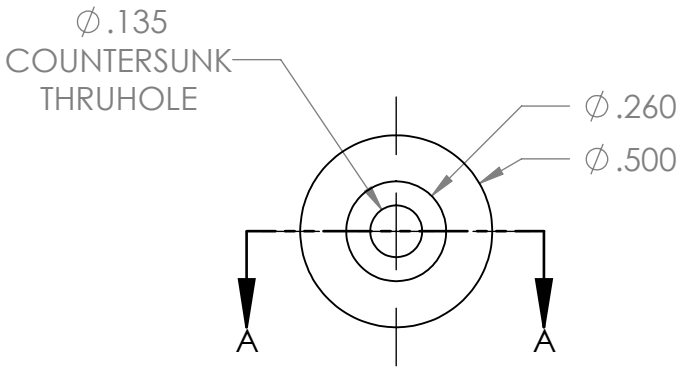

GRADE: **N42**	**PROPRIETARY AND CONFIDENTIAL**	**UNLESS OTHERWISE SPECIFIED:**	NAME		DATE
MAGNETIZED: **YES**	THE INFORMATION CONTAINED IN THIS DRAWING IS THE SOLE PROPERTY OF AMAZING MAGNETS LLC ANY REPRODUCTION IN PART OR AS A WHOLE WITHOUT THE WRITTEN PERMISSION OF AMAZING MAGNETS LLC IS PROHIBITED.	DIMENSIONS ARE IN INCHES TOLERANCES: FRACTIONAL ± 1/64 ANGULAR: MACH ± 1° TWO PLACE DECIMAL ± 0.01 THREE PLACE DECIMAL ± 0.005	DRAWN	LB	1/27/2012
RESIDUAL INDUCTION (Br): **12.8-13.2 KG**			CHECKED	TB	1/27/2012
COERCIVE FORCE (Hc): **≥ 11.5 KOe**		MATERIAL: **NdFeB**	COMMENTS: ALL EDGES BROKEN 0.025 MAX		
INTRINSIC COERCIVE FORCE (Hci): **≥ 12.0 KOe**					
MAX. ENERGY PRODUCT (BHmax): **40-43 MGOe**	CAGE CODE **4R1R7**	FINISH: **Ni-Cu-Ni** (silver in color)			
MAX OPERATIONAL TEMP: **80C / 176F**		DO NOT SCALE DRAWING			

AMAZING MAGNETS®

TITLE: DH250D-FS-N42

SIZE	DWG. NO.	REV
A	DH250D-FS-N42-SPECS	0

SCALE 2 : 1

5 4 3 2 1