REVISIONS				
ZONE	REV.	DESCRIPTION	DATE	APPROVED
SHEET1	REV0	INITIAL RELEASE	12/13/2019	Spencer W.

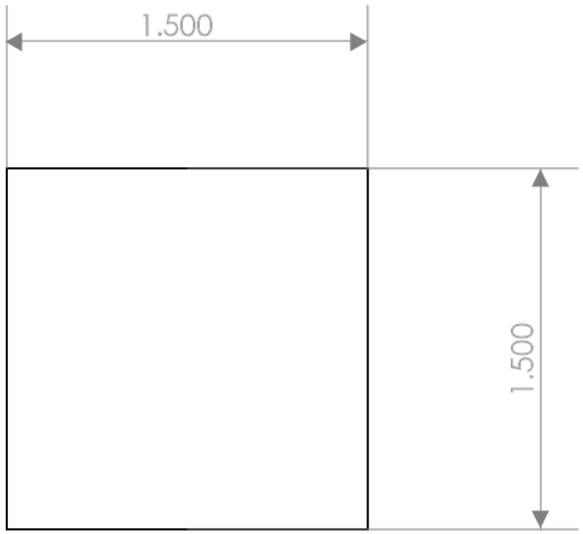

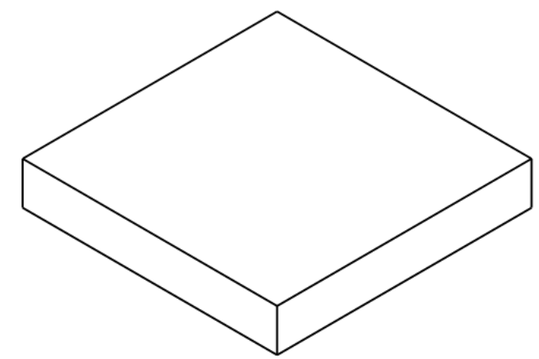

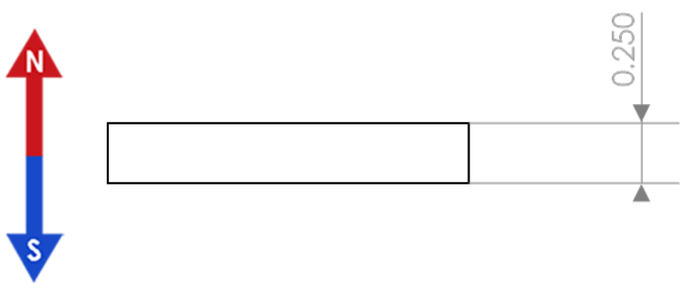

CONDITIONS

1. PART IS TO BE FREE OF SCRATCHES, DENTS, AND DEFECTS CAUSED DURING PRODUCTION.
2. PART IS TO BE FREE OF GREASE, AND DISCOLORATION ON ALL SURFACES.
3. PARTS MUST BE PACKAGED IN A MANOR SUITABLE TO AVOID DAMAGE DURING TRANSPORT, STORAGE, AND HANDLING

MAGNETIC PROPERTIES

MATERIAL: LICENSED NdFeB
GRADE: N42
COATING: Nickel (Ni-Cu-Ni)
MAGNETIZED: THICKNESS
Br (KG): 12.8-13.2
HcB (KOe): ≥11.5
Hci (KOe): ≥12.0
BHmax (MGOe): 40-43
MAXIMUM TEMPERATURE: 80C / 176F

PROPRIETARY AND CONFIDENTIAL

THE INFORMATION CONTAINED IN THIS DRAWING IS THE SOLE PROPERTY OF AMAZING MAGNETS LLC ANY REPRODUCTION IN PART OR AS A WHOLE WITHOUT THE WRITTEN PERMISSION OF AMAZING MAGNETS LLC IS PROHIBITED.

CAGE CODE
4R1R7

UNLESS OTHERWISE SPECIFIED

DIMENSIONS ARE IN INCHES
TOLERANCES:
ANGULAR: MACH ± 1°
TWO PLACE DECIMAL ± 0.005"
THREE PLACE DECIMAL ± 0.004"

DO NOT SCALE DRAWING

	NAME	DATE
DRAWN	Christi P.	12/13/2019
CHECKED	Spencer W.	12/13/2019

COMMENTS:

AMAZING MAGNETS®

TITLE: Q250L-N42

SIZE	DWG. NO.	REV
B	Q250L-N42-SPECS	0